Bed Assembly Instruction

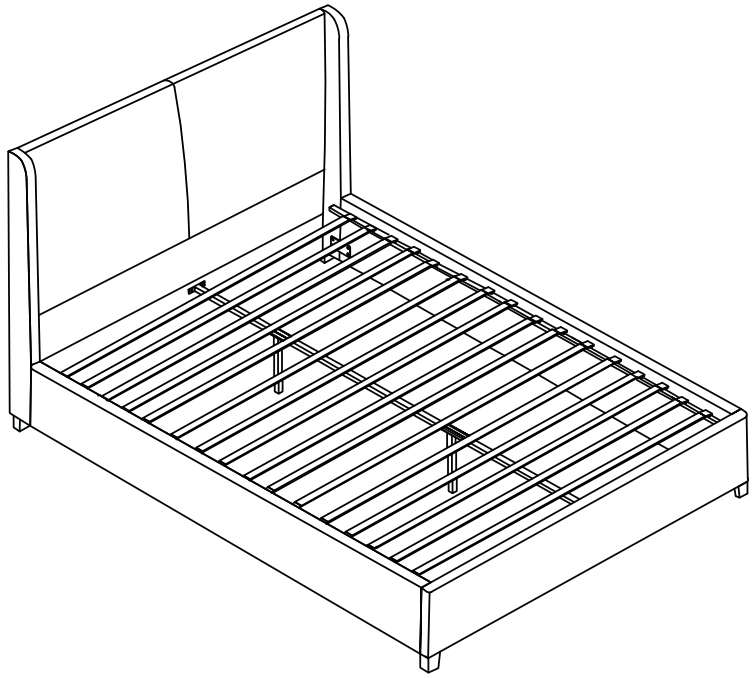

Ax24 M8x30mm	Bx4 M8	Cx16	Dx40	Ex1	Fx1
Gx20 M8x40mm	Hx4 M8x50mm				

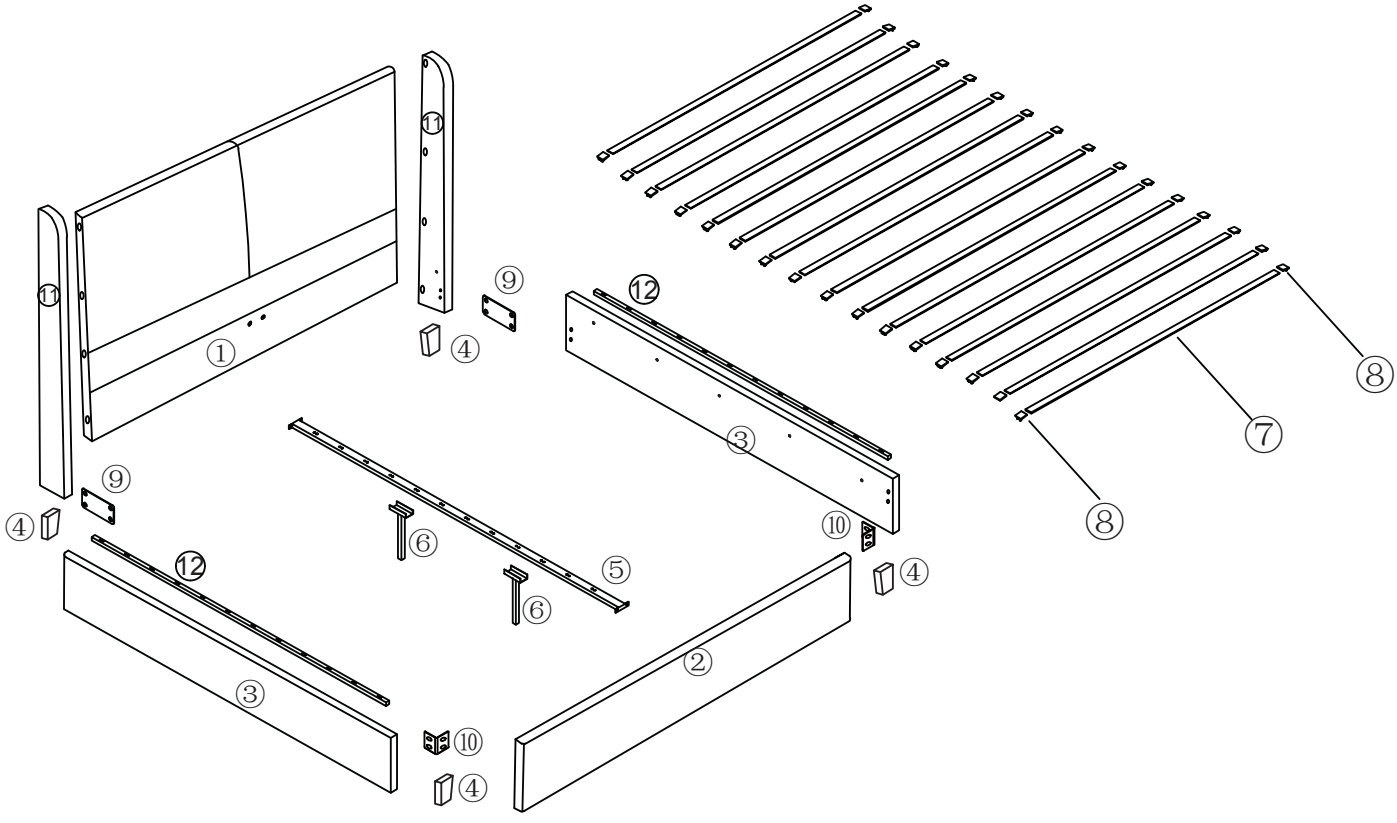

Mattress Size:153*203cm

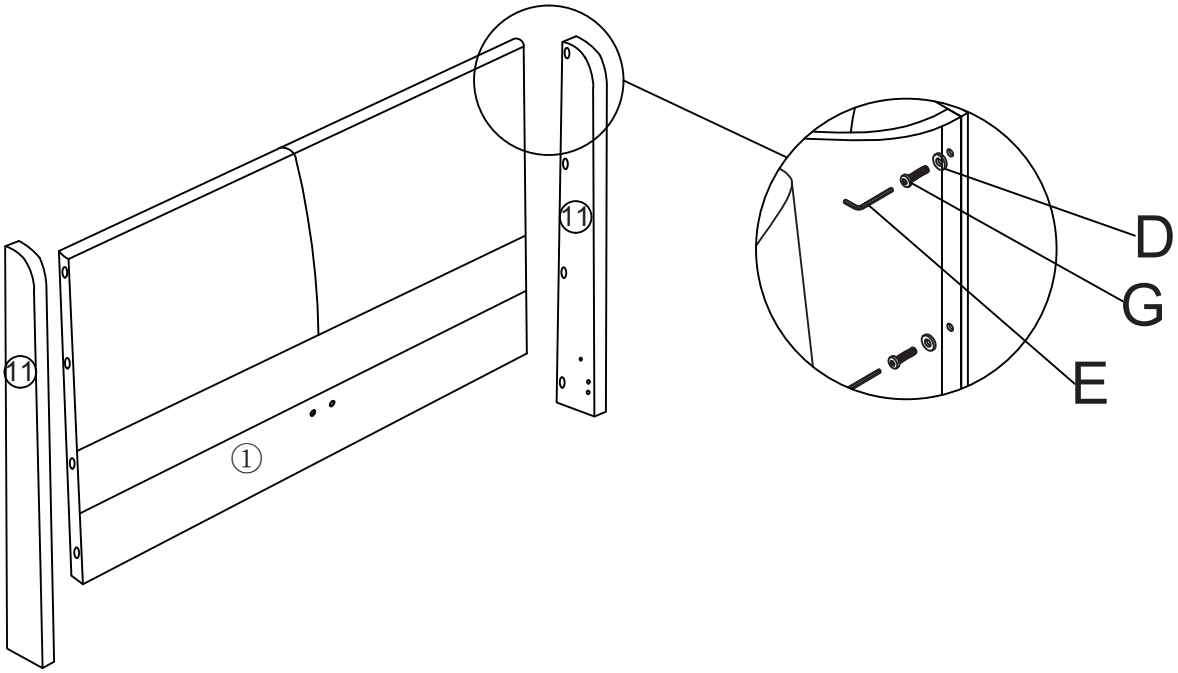
11
11
①
D
G
E

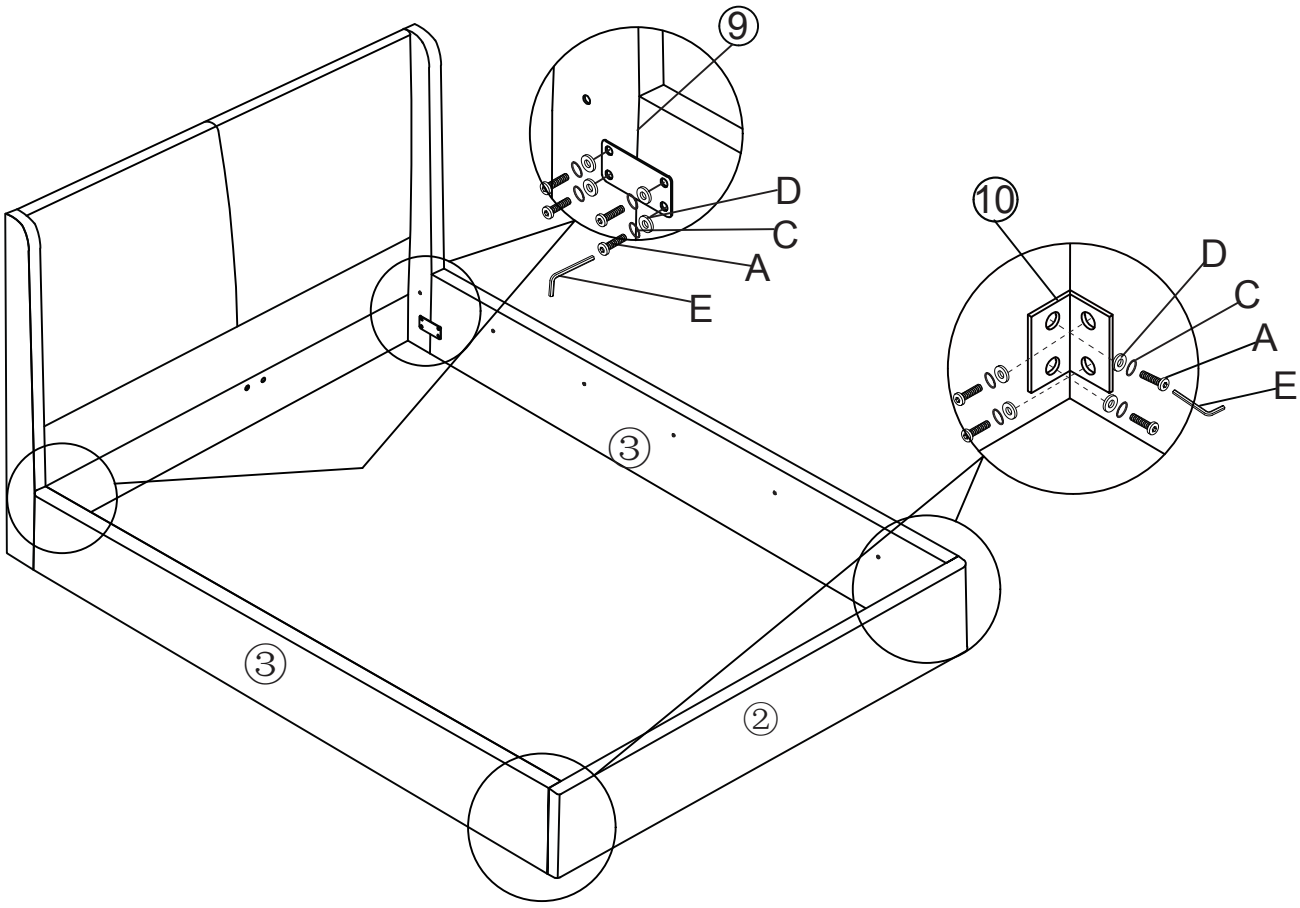
⑨
D
C
A
E
③
③
②
⑩
D
C
A
E

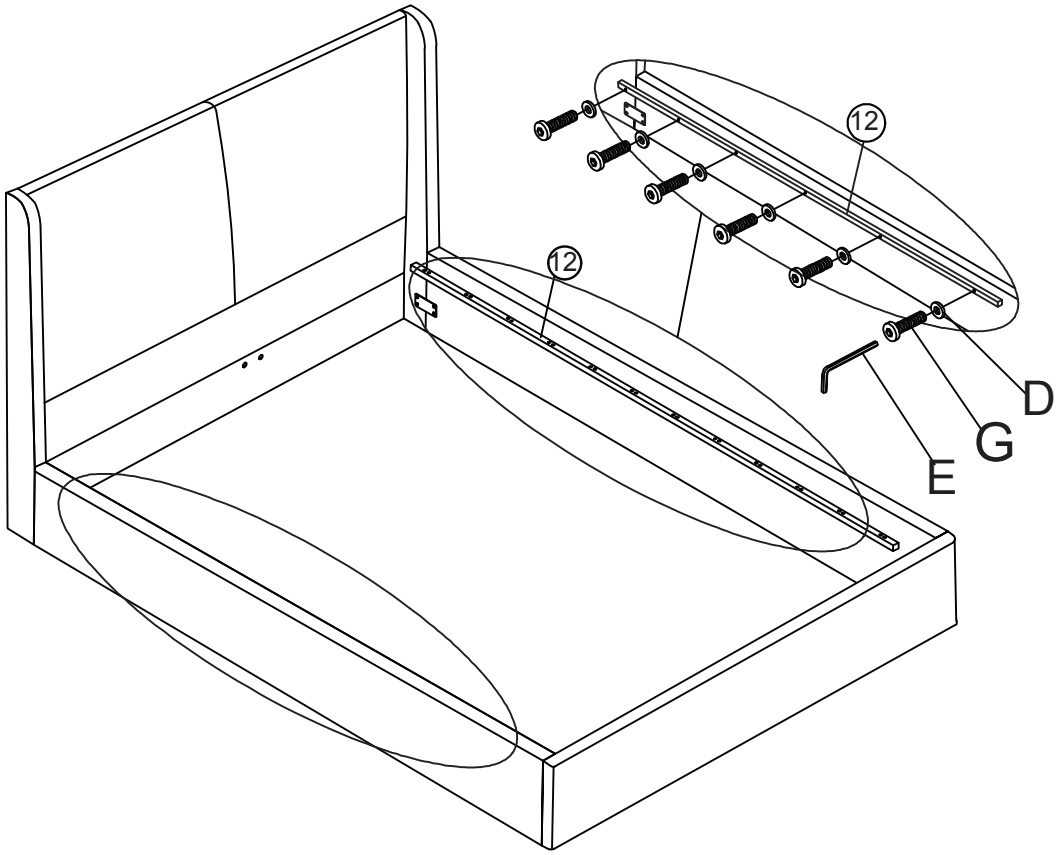
12
12
D
G
E

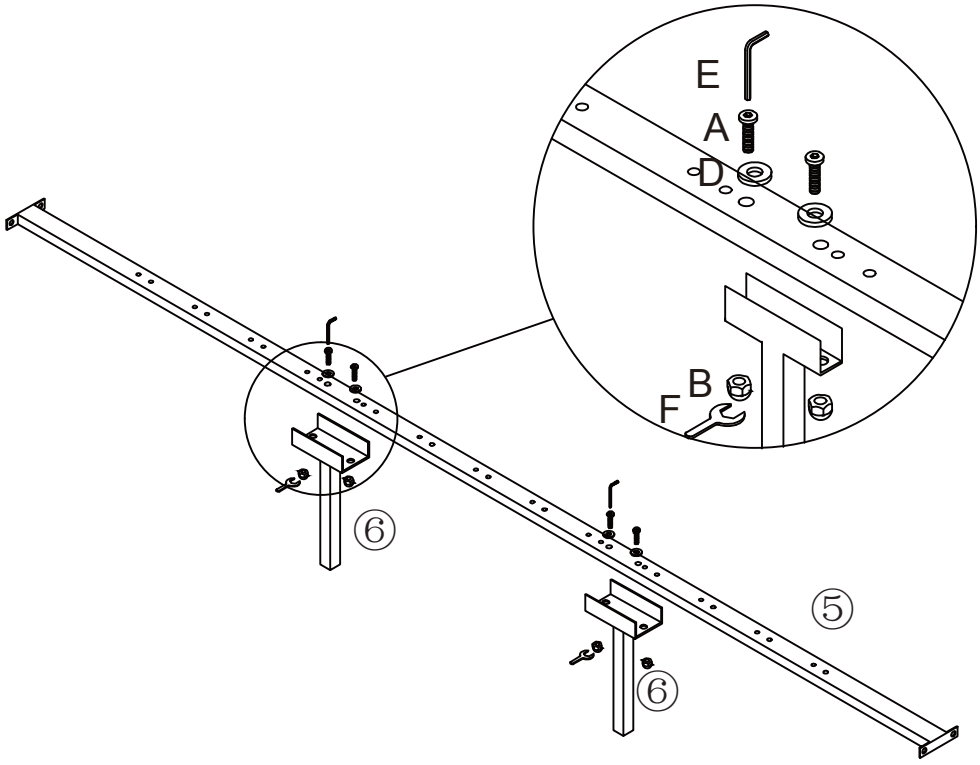
E
A
D
B
F
⑥
⑤
⑥

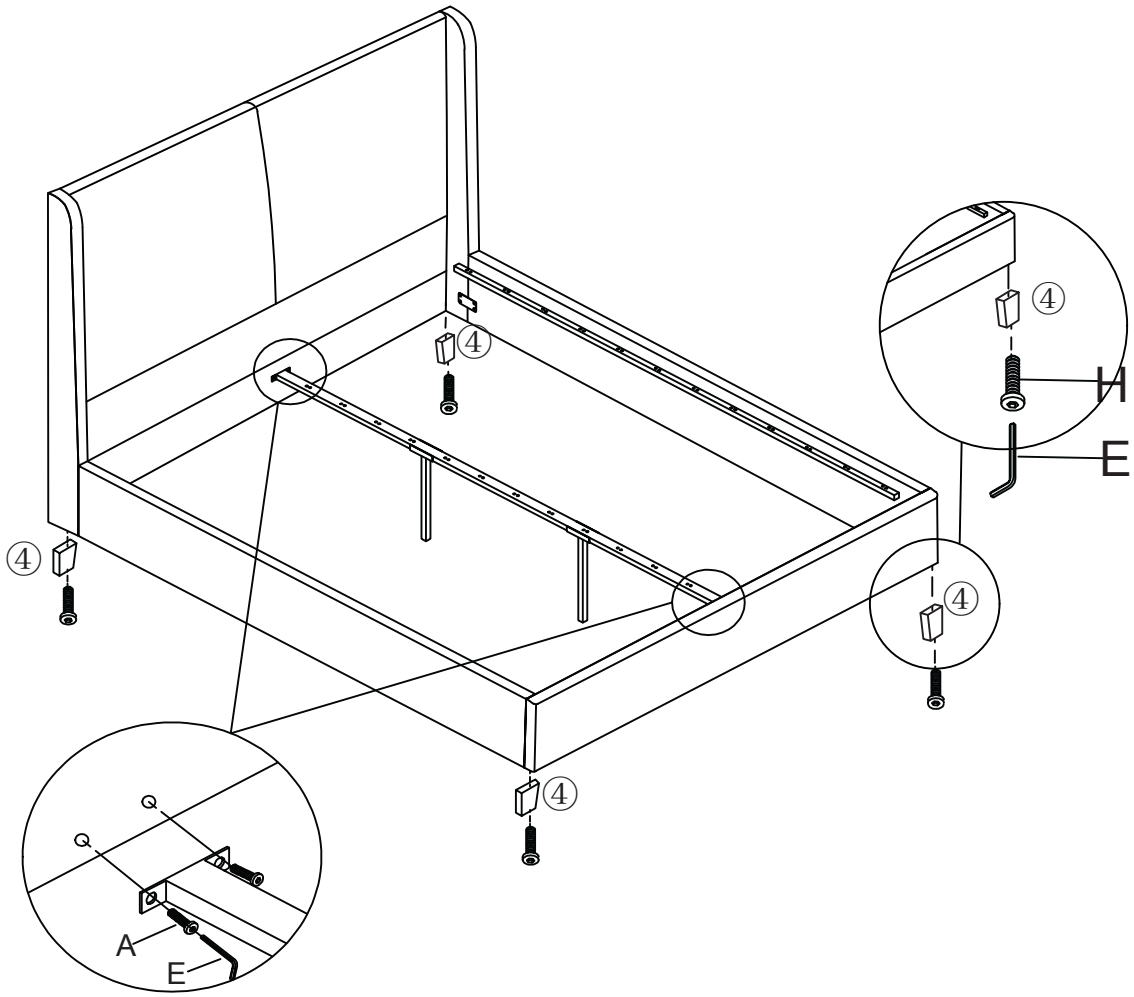
④
④
④
④
H
E
Q
Q
A
E

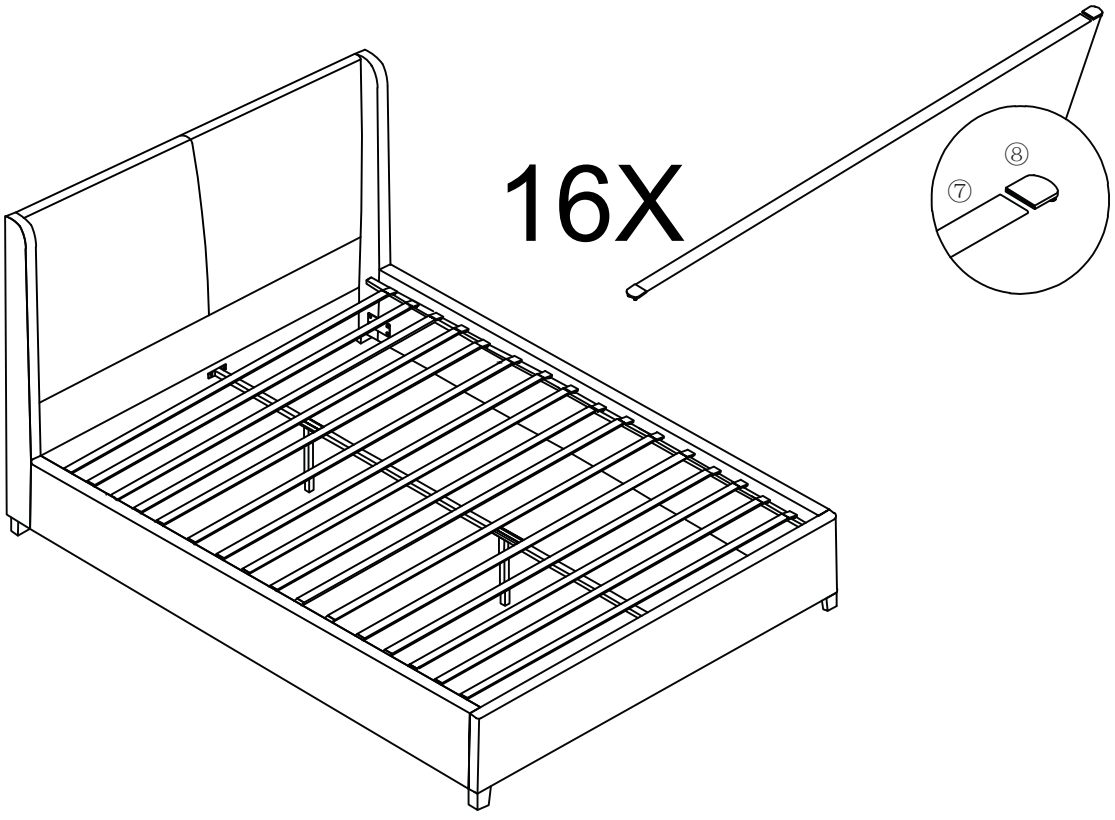
16X
⑧
⑦