Wallace Single/King Single Bed

Assembly Instructions



Minimum No.of people recommended to assemble this product: 2

Approx assembly time: 1/2 hours

Before you Start, here are some helpful advices.

1. We suggest you spend a short time reading through this leaflet and then follow the simple step by step instructions.
2. If you follow the instructions carefully the end result should be worth the effort.
3. Do not discard any of the packaging until you have checked that you have all the parts and the pack of fittings.
4. Assemble this product on a carpet.
5. To ensure an easier assembly, we strongly advise that all fittings are only finger tightened during initial assembly. Only upon completion of the. Assembly should all fixing points be fully tightened.
6. We recommend a periodic check on all fixing points to make sure they remain fully tightened.
7. Keep glue and fittings out of children's reach.

PARTS

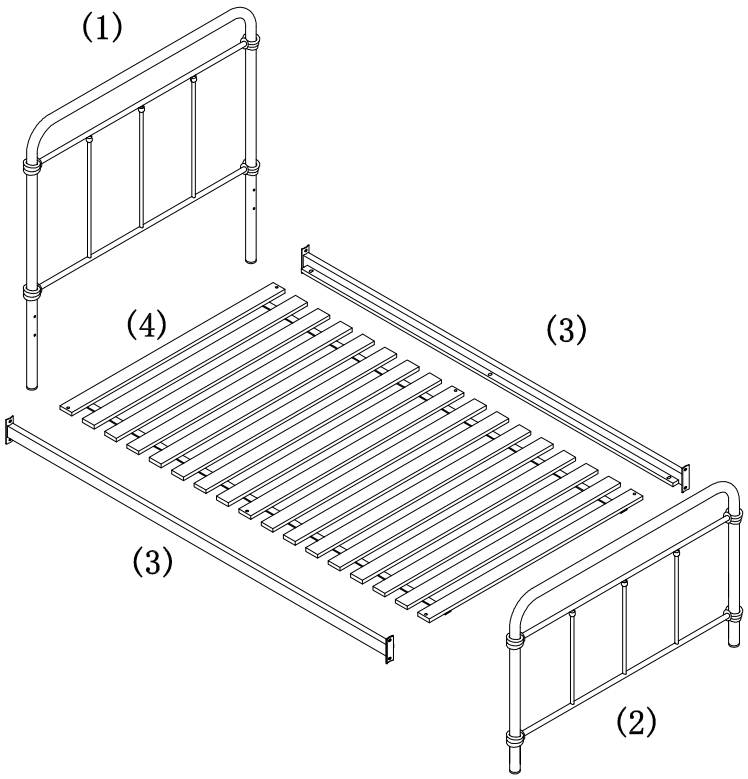

NO.	PART LIST	QTY
(1)	Headboard	1
(2)	Footboard	1
(3)	Side Rails	2
(4)	Solid slats	1

Fittings

A



M8 x 25mm x8pcs

B



M6 x 30mm x6pcs

C



M6 x6pcs

D



Metal Washer(M8) x8pcs

E



Plastic Washer x8pcs

F



Metal Washer(M6) x6pcs

G

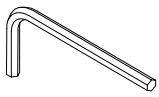

5mm Allen key x1pcs

H

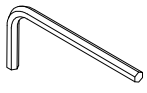

4mm Allen key x2pcs

ASSEMBLY



1.Use bolt (A)、washer (E) and plastic washer (D) to fix the side rail (3) onto headboard (1) and footboard (2) by using allen key (G).

STEP 1

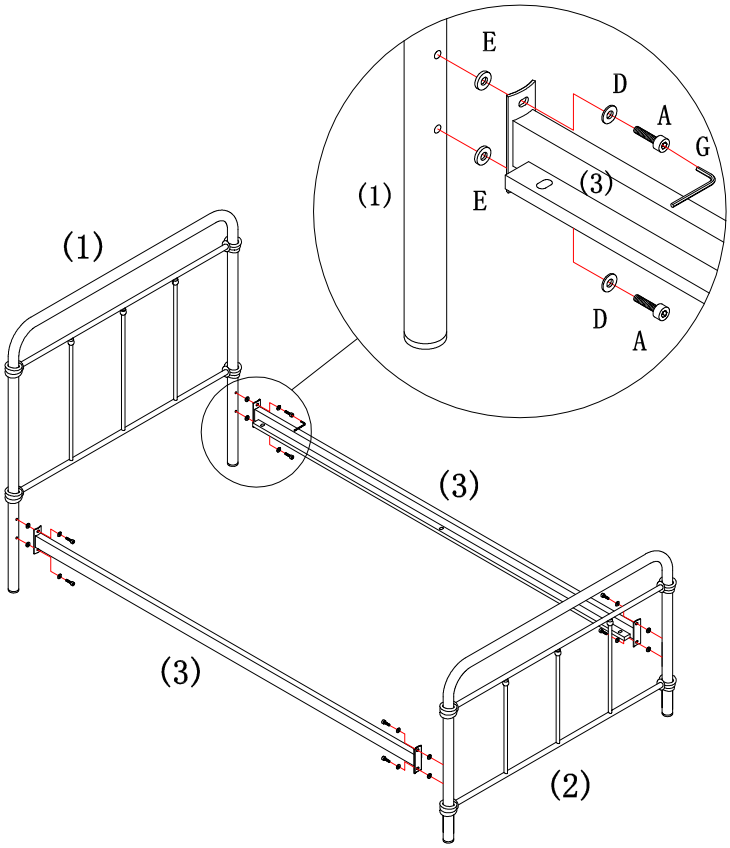

ASSEMBLY



1.Fit slats (4) to bed side rails(3).Webbing side of slats to the bottom.

2.Assemble slats (4) onto side rails(3) by using bolt (B), washer (F), nut (C) and allen key (H).

STEP 2

