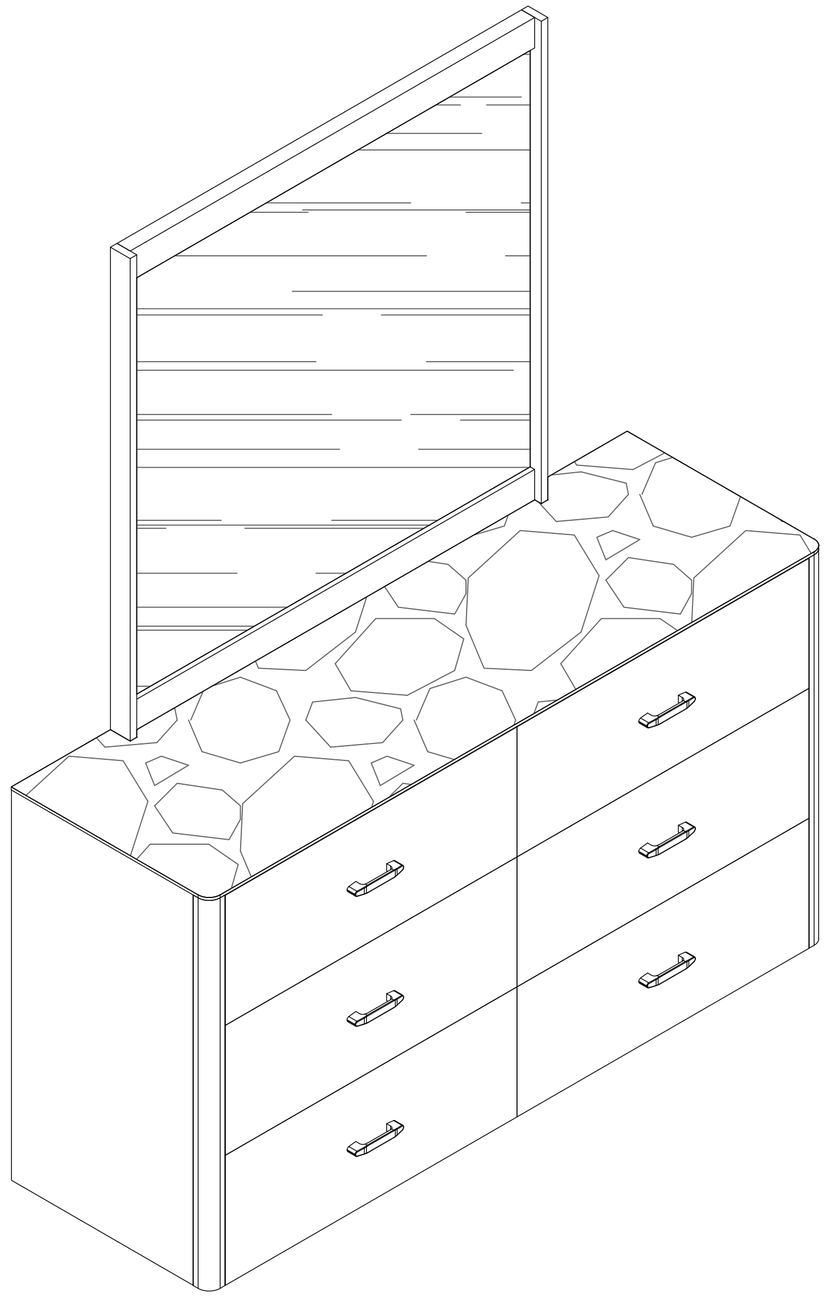

	RANGE:	Dresser Mirror	MODEL CODE:	3343DRHD-12/SLA 3342MR-85/SLA	PRODUCT SIZE:	1200*450*1750H	Page:	2-1

STEP.1

M6*30=8

=1

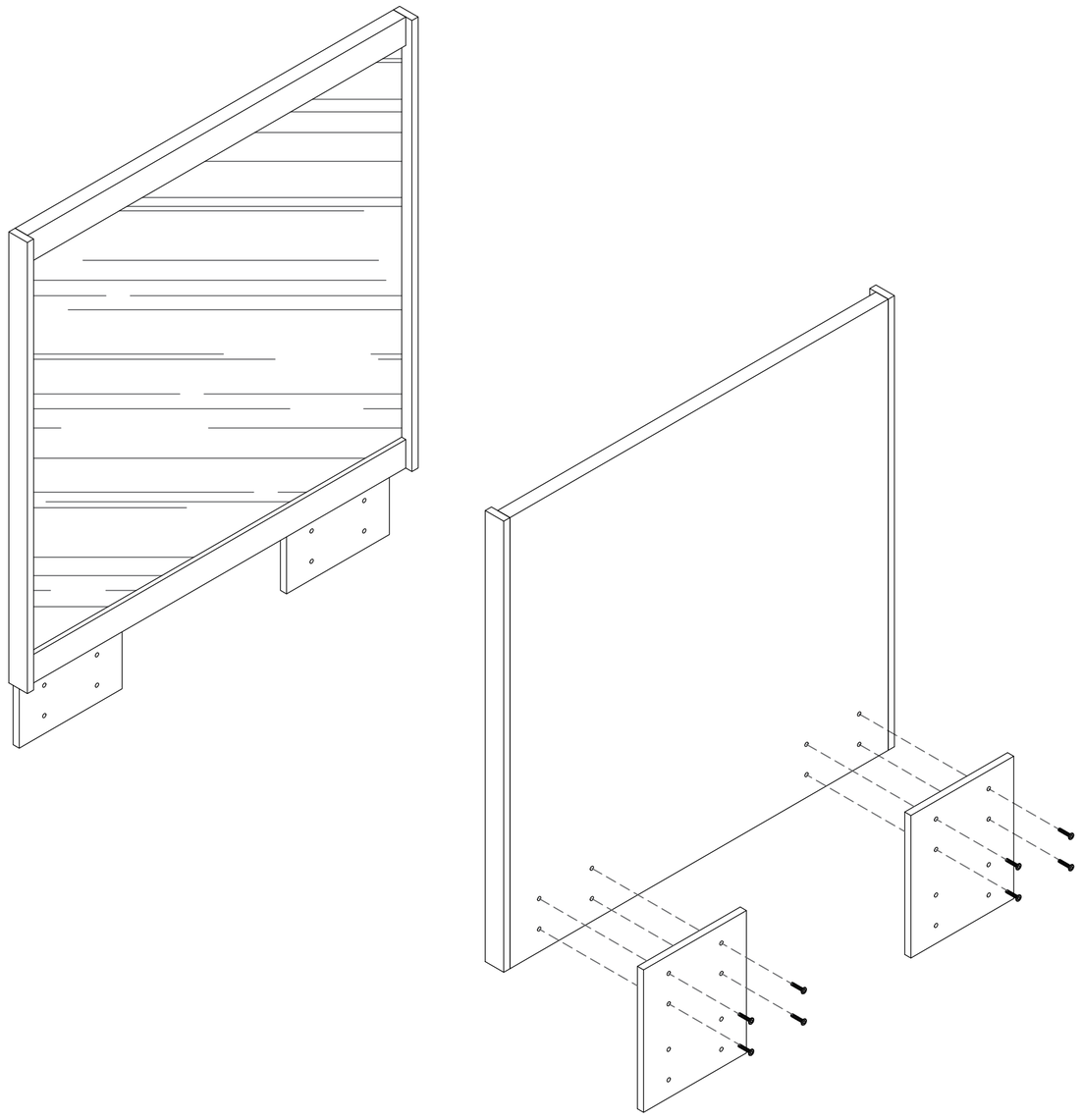

STEP.2

M6*30=8

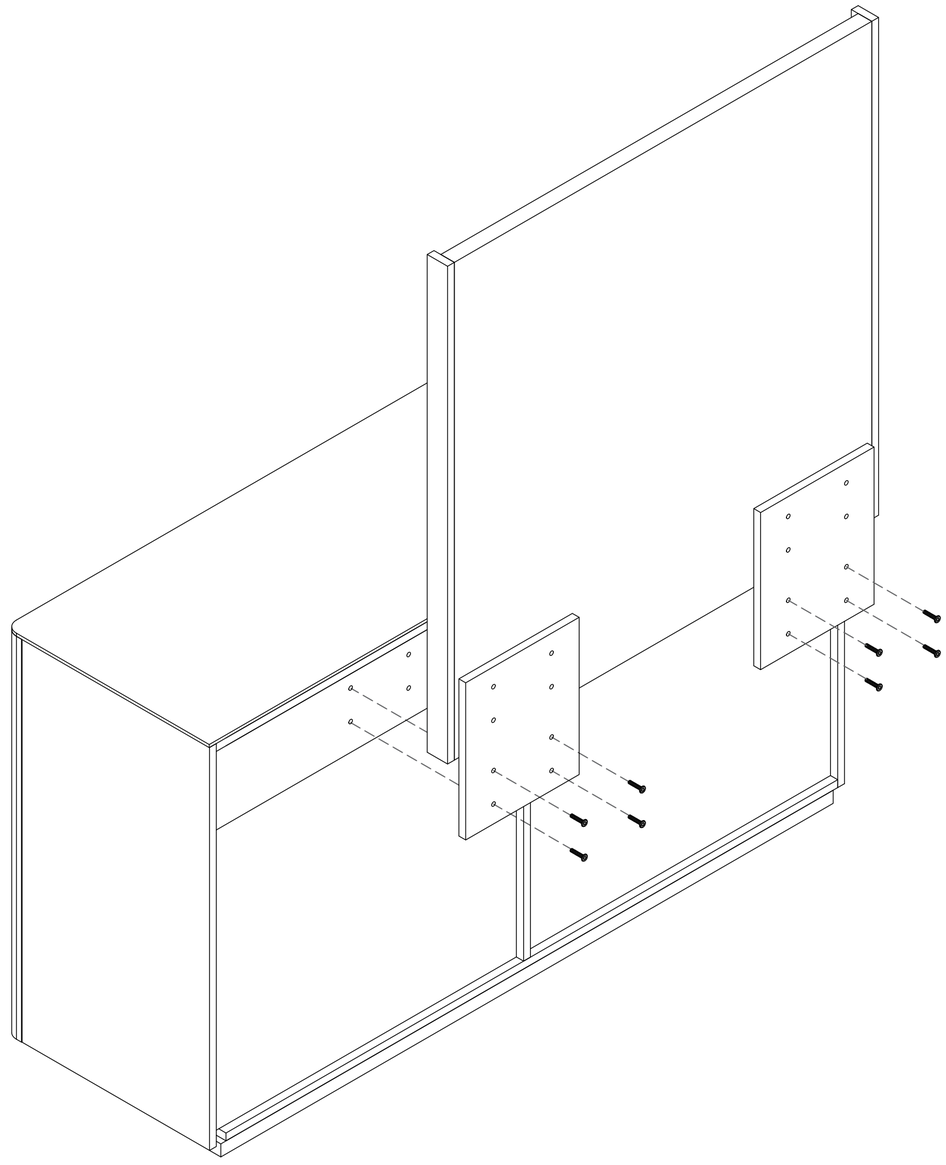

	RANGE:	Dresser Mirror	MODEL CODE:	3343DRHD-12/SLA 3342MR-85/SLA	PRODUCT SIZE:	1200*450*1750H	Page:	2-2