Queen/King Bed (E-25167)

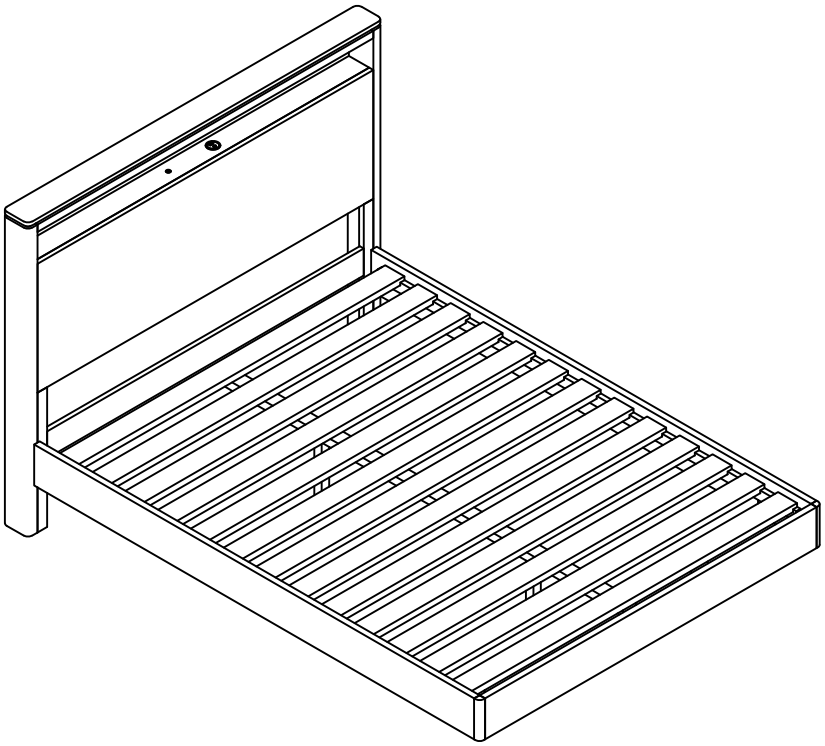

Parts List

No.	Description		Qty
1	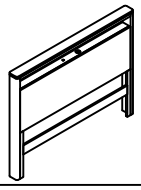	Headboard	1pc
2	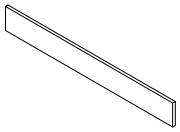	Footboard	1pc
3	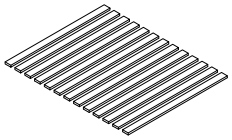	Slats	13pcs
4	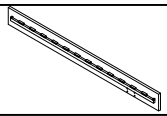	Side Rail (L)	1pc
5	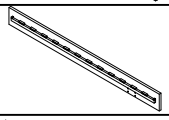	Side Rail (R)	1pc
6	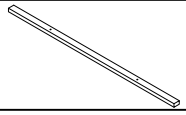	Centre Support Bar	1pc
7		Centre stand	2pcs
8		Metal Leg Stand	2pcs
9	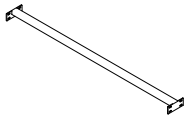	Metal Leg	1pc

Hardware List

No.	Description			Qty
A		Allen Key	M6	1pc
B		Allen Key	M8	1pcs
C	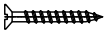	Self-Tapping Screws	M4 x 40	39pcs
D		Hexagon Socket Screws	M6 x 15	8pcs
E		Hexagon Socket Screws	M6 x 20	8pcs
F		Hexagon Socket Screws	M8 x 20	4pcs
G		Washer	M6*12	8pcs
H		Washer	M6*18	8pcs
I		Washer	M8	4pcs

Tool required not included:

Screw Driver

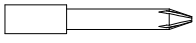

Approx: 30min Assembly Required

MADE IN CHINA

Queen/King Bed (E-25167)

Step1

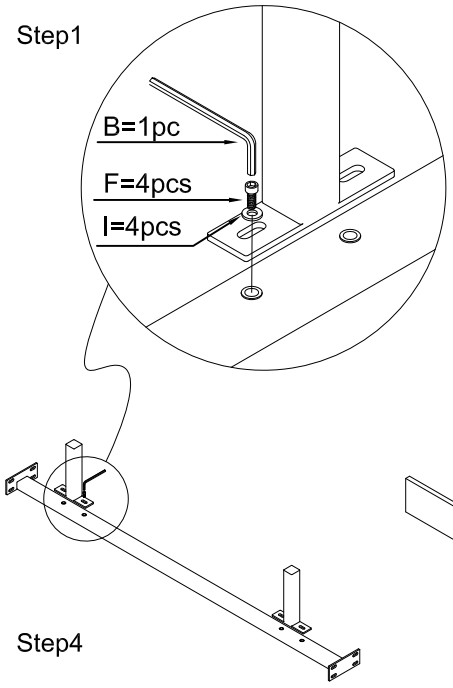

Step2

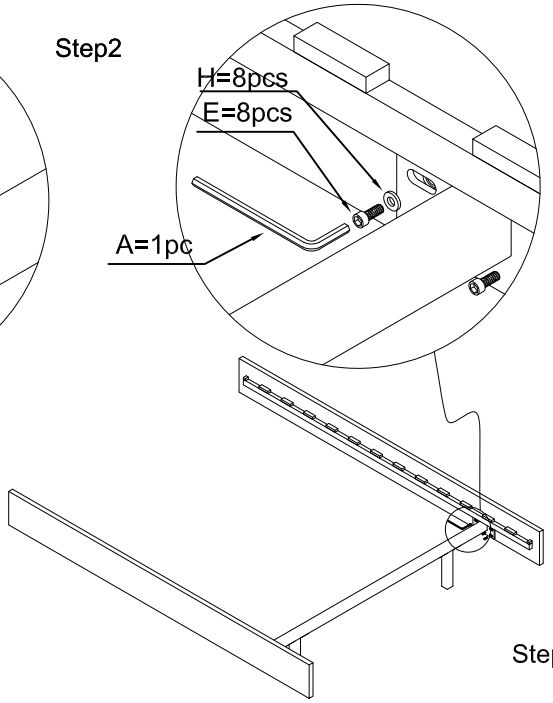

Step3

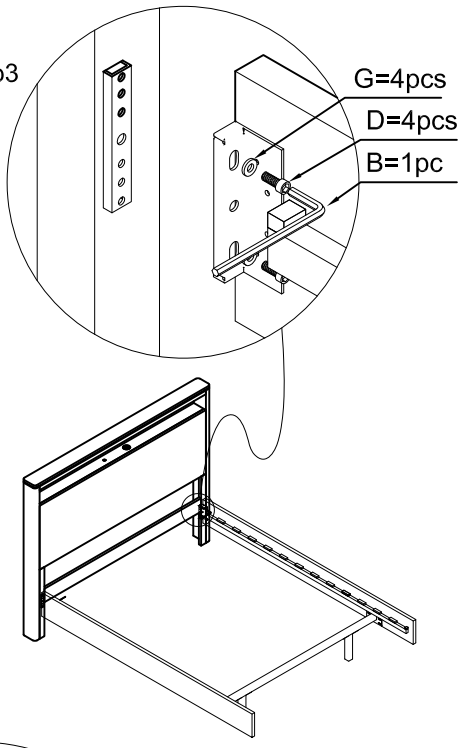

Step4

Step5

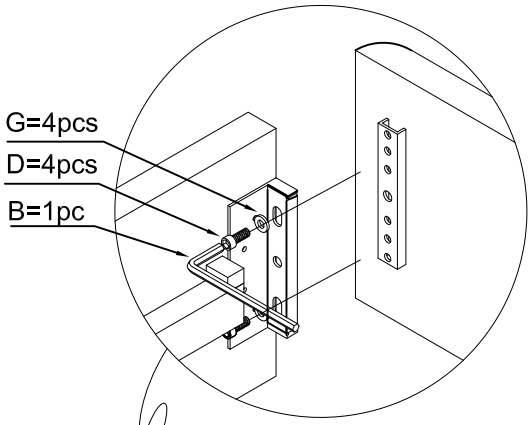

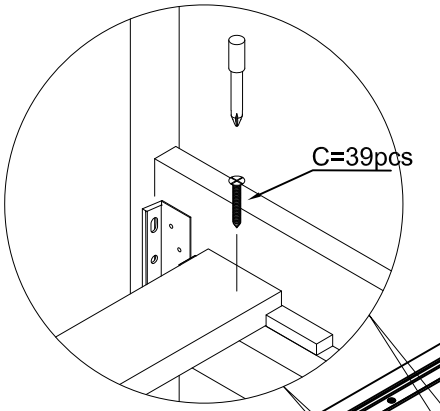

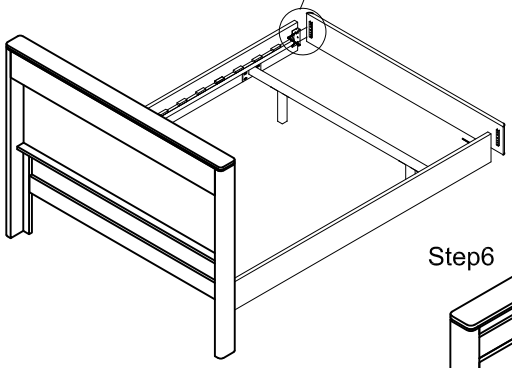

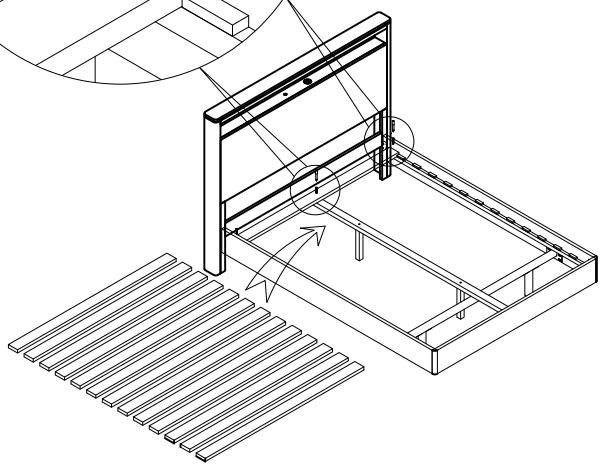

Step6

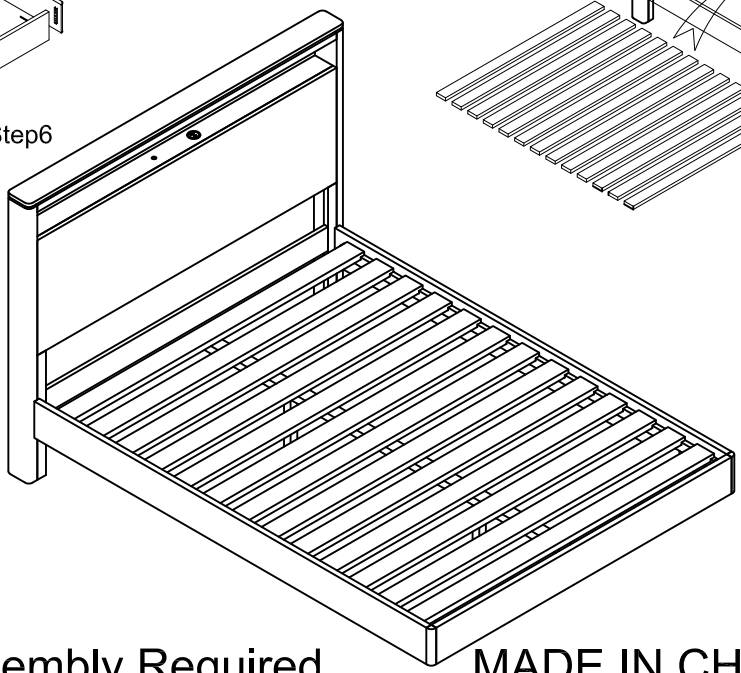

Approx: 30min Assembly Required

MADE IN CHINA